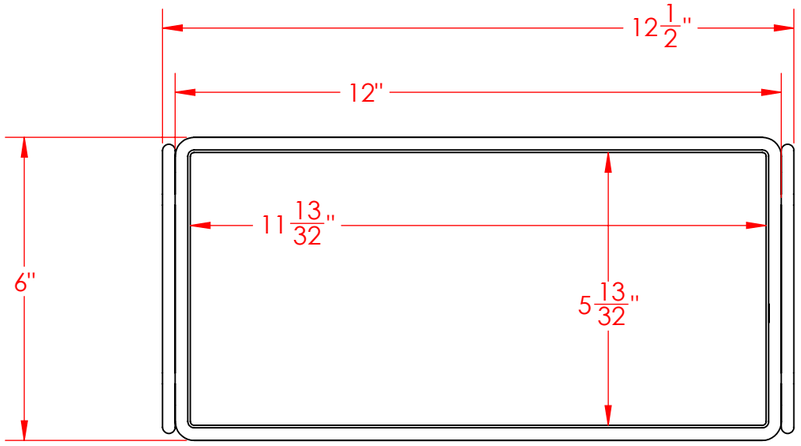

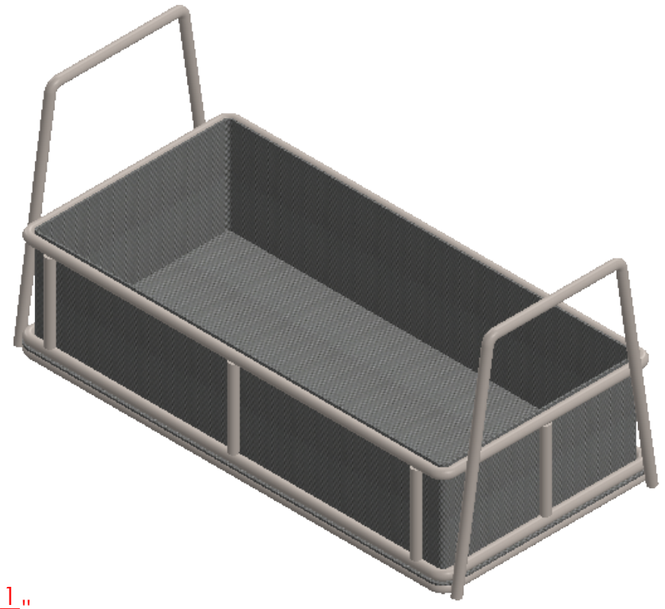

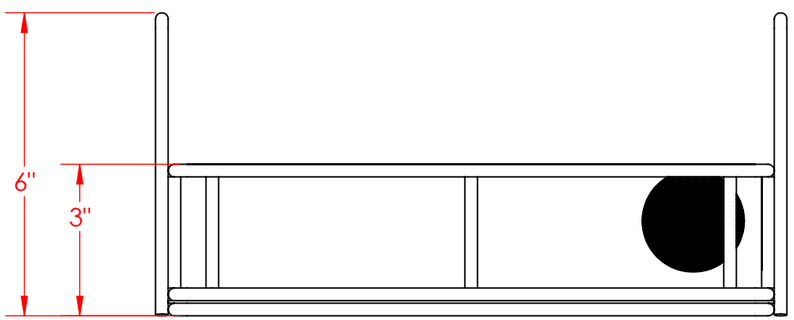

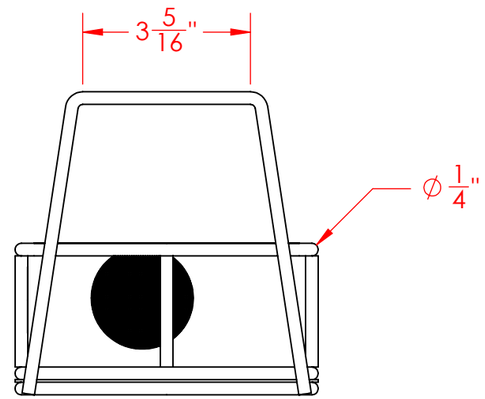

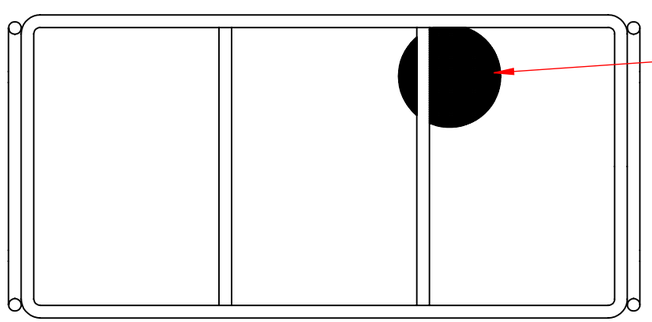

Lined Bottom and Sides with
30 Mesh x .012" Woven Wire
(.021" Openings, 40% Open Area)

PROPRIETARY AND CONFIDENTIAL

THE INFORMATION CONTAINED IN THIS DRAWING IS THE SOLE PROPERTY OF THREE M TOOL. ANY REPRODUCTION IN PART OR AS A WHOLE WITHOUT THE WRITTEN PERMISSION OF THREE M TOOL IS PROHIBITED.

UNLESS OTHERWISE SPECIFIED:

DIMENSIONS ARE IN INCHES
TOLERANCES:
FRACTIONAL ± 1/16"
ANGULAR: ± 5 DEG.
TWO PLACE DECIMAL ±0.03
THREE PLACE DECIMAL ±0.015

EST WGT
2.6 lbs.

MATERIAL
304 Stainless Steel

FINISH
Natural

DO NOT SCALE DRAWING

Rectangular Wire Mesh Basket: 12Lx6Wx3H, 304 SS, 1/4 Rod Frame, Stacking Handles, Mesh: 30 x .012

SIZE **B**

DWG. NO.
TMT-120060030-A30S

SCALE: 1:3

SHEET 1 OF 1